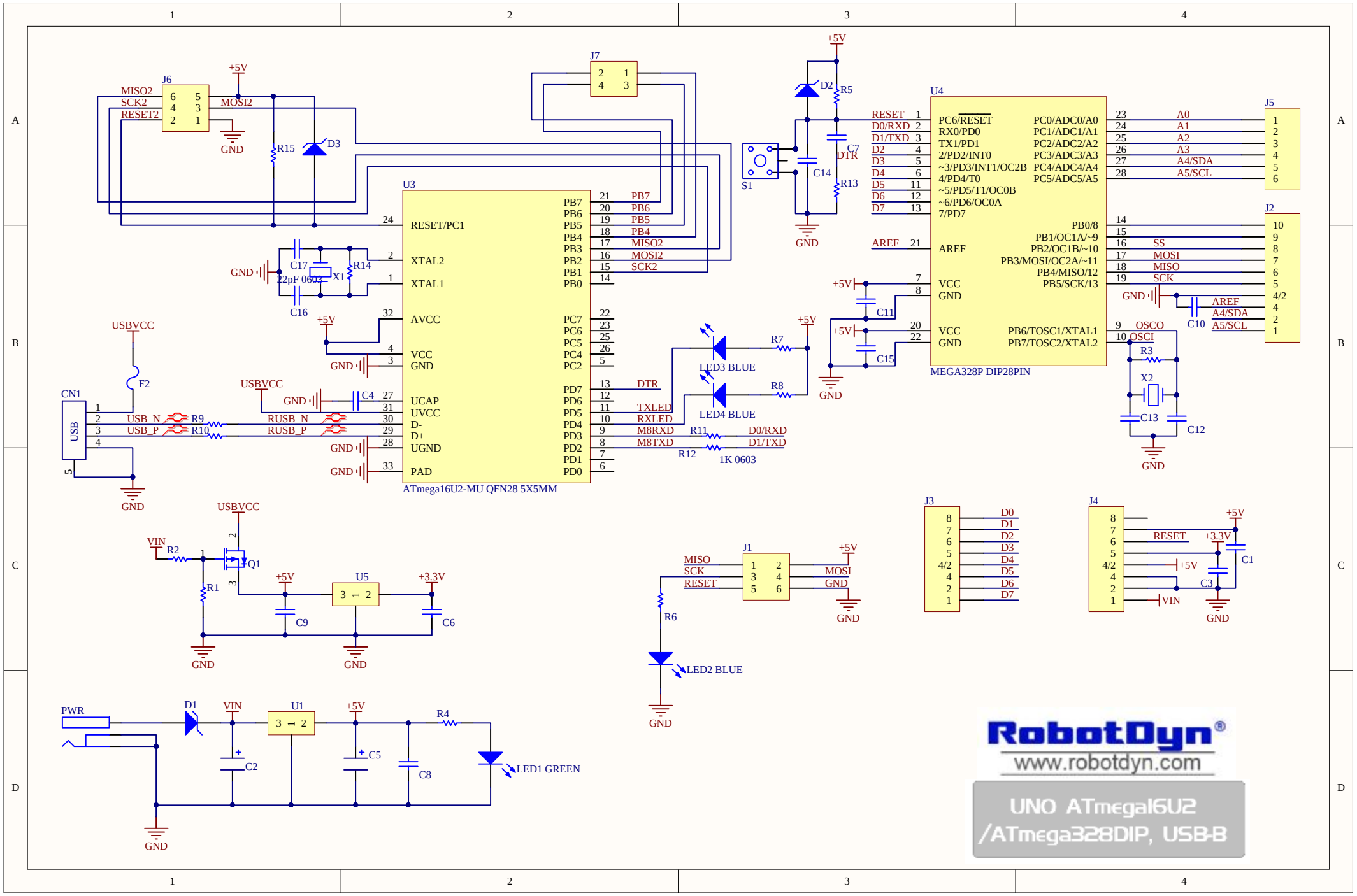
J6
MISO2
SCK2
RESET2
MOSI2
+5V
GND
R15
D3
J7
U3
RESET/PC1
XTAL2
XTAL1
AVCC
VCC
GND
UCAP
UVCC
D-
D+
UGND
PAD
PB7
PB6
PB5
PB4
PB3
PB2
PB1
PB0
PC7
PC6
PC5
PC4
PC2
PD7
PD6
PD5
PD4
PD3
PD2
PD1
PD0
DTR
TXLED
RXLED
M8RXD
M8TXD
ATmega16U2-MU QFN28 5X5MM
C17
22pF 0603
X1
R14
C16
C4
USBVCC
F2
CN1
USB
USB_N
USB_P
R9
R10
RUSB_N
RUSB_P
R11
R12
1K 0603
D0/RXD
D1/TXD
LED3 BLUE
LED4 BLUE
R7
R8
D2
R5
C7
C14
R13
S1
U4
RESET
D0/RXD
D1/TXD
D2
D3
D4
D5
D6
D7
AREF
PC6/RESET
RX0/PD0
TX1/PD1
2/PD2/INT0
~3/PD3/INT1/OC2B
4/PD4/T0
~5/PD5/T1/OC0B
~6/PD6/OC0A
7/PD7
PC0/ADC0/A0
PC1/ADC1/A1
PC2/ADC2/A2
PC3/ADC3/A3
PC4/ADC4/A4
PC5/ADC5/A5
PB0/8
PB1/OC1A/~9
PB2/OC1B/~10
PB3/MOSI/OC2A/~11
PB4/MISO/12
PB5/SCK/13
PB6/TOSC1/XTAL1
PB7/TOSC2/XTAL2
MEGA328P DIP28PIN
C11
C15
J5
A0
A1
A2
A3
A4/SDA
A5/SCL
J2
SS
MOSI
MISO
SCK
AREF
A4/SDA
A5/SCL
C10
OSCO
OSCI
R3
X2
C13
C12
J1
MISO
SCK
RESET
MOSI
GND
R6
LED2 BLUE
J3
D0
D1
D2
D3
D4
D5
D6
D7
J4
RESET
+3.3V
C1
C3
VIN
Q1
R2
R1
U5
C9
C6
PWR
D1
U1
C2
C5
C8
R4
LED1 GREEN
RobotDyn®
www.robotdyn.com
UNO ATmega16U2
/ATmega328DIP, USB-B