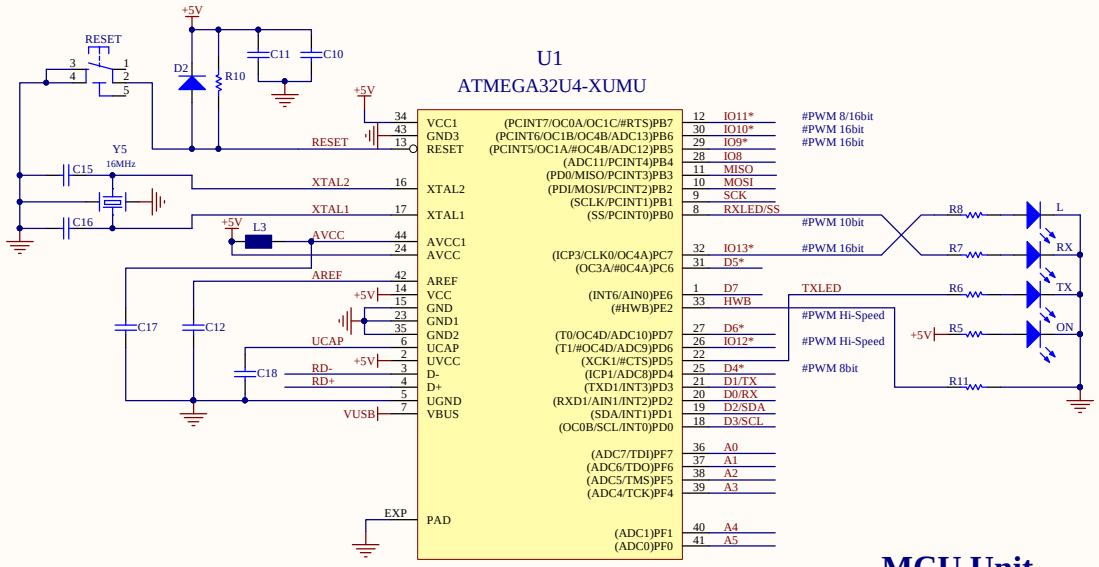

MCU Unit

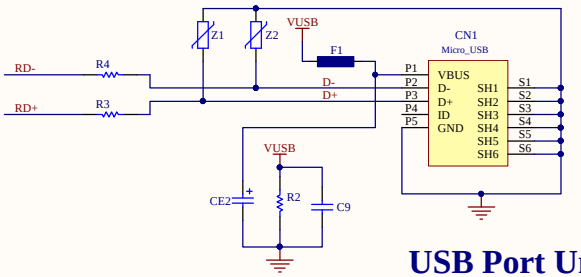

USB Port Unit

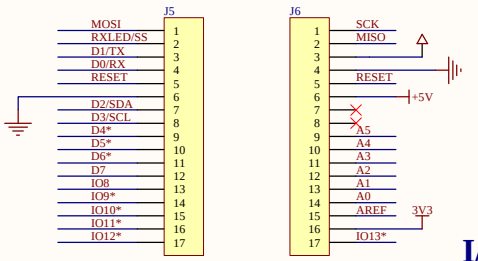

I/O Unit

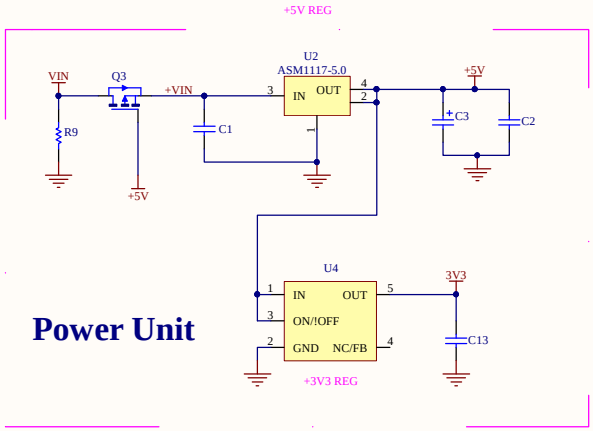

Power Unit

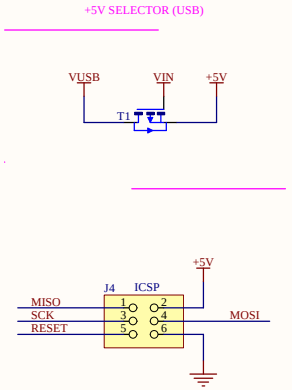

RobotDyn®
www.robotdyn.com

Micro ATmega32U4
(5V, 16MHz)