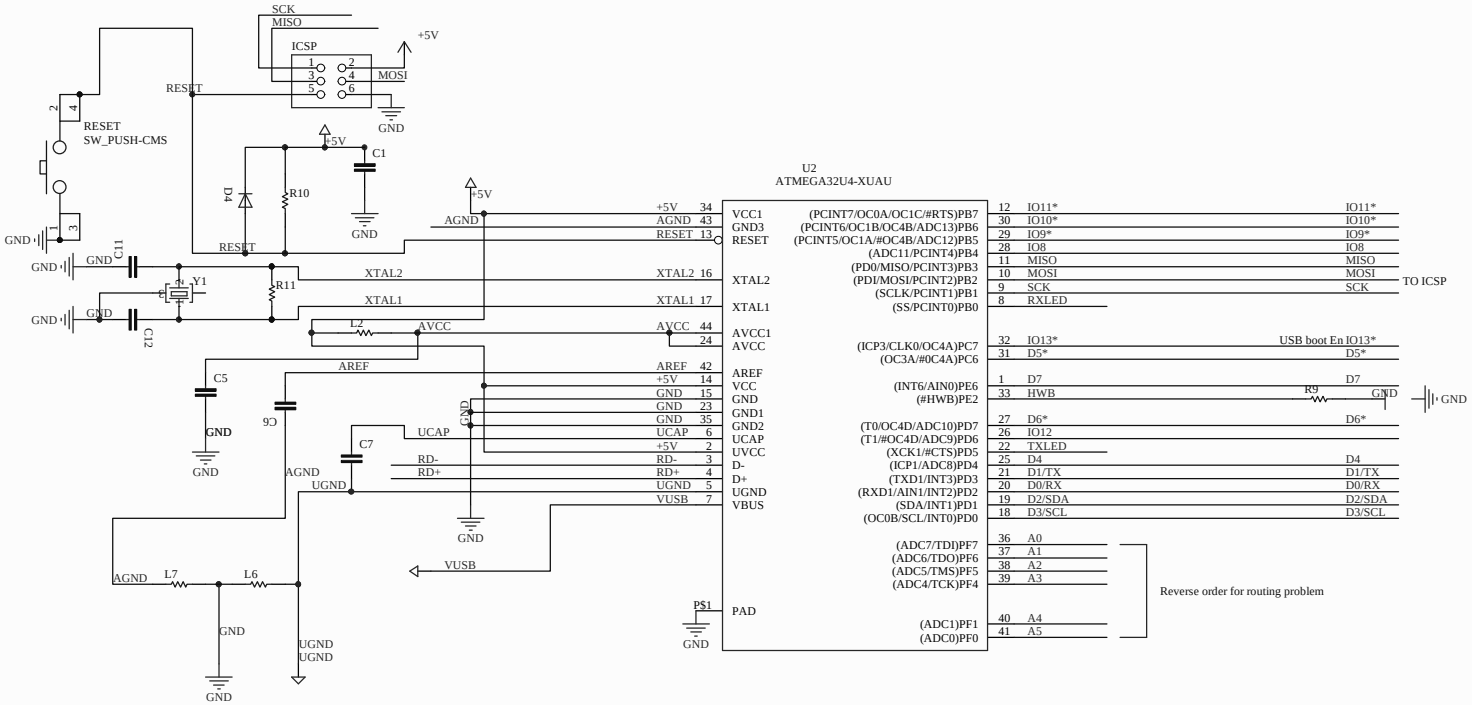

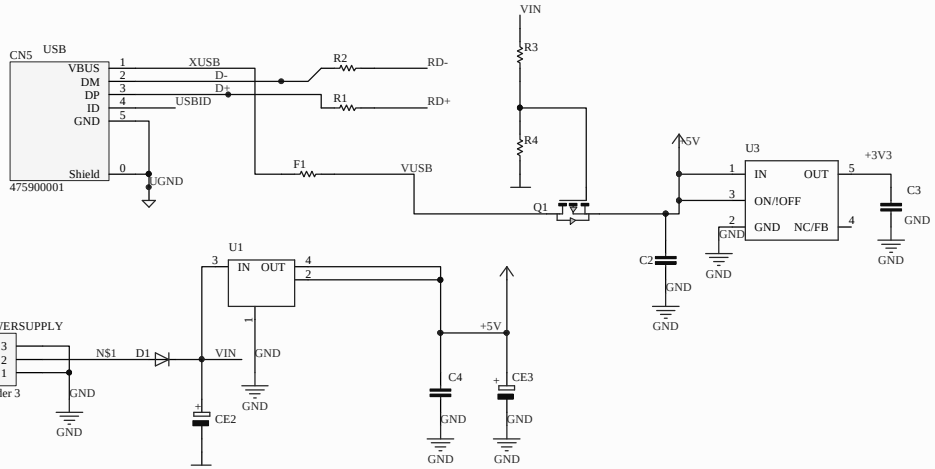

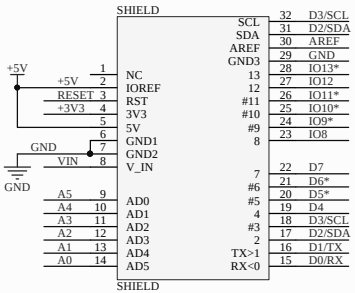

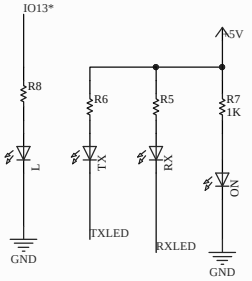

RobotDyn®
www.robotdyn.com

LEONARDO-R3