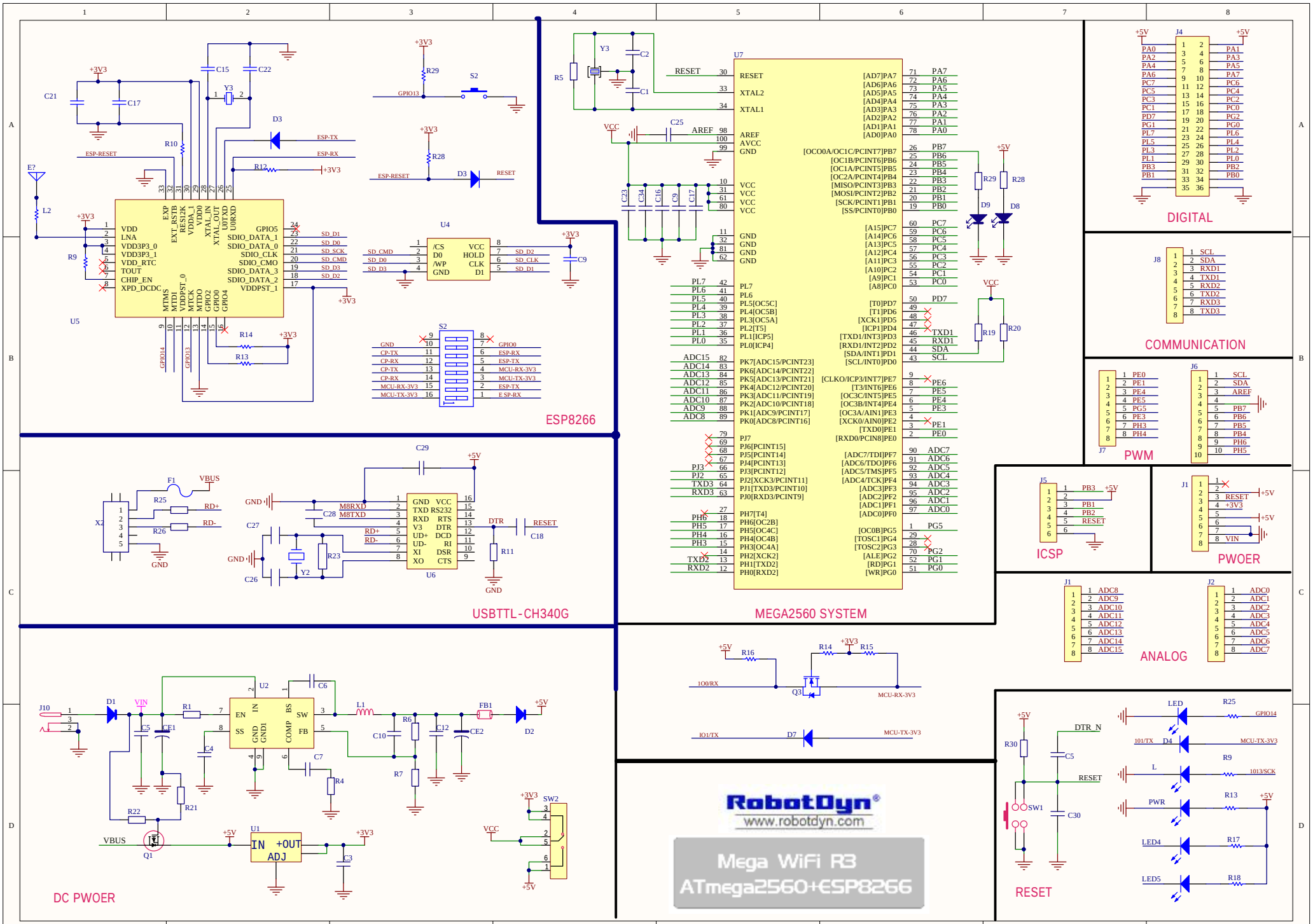
ESP8266
U5
U4
S2
USBTTL-CH340G
U6
MEGA2560 SYSTEM
U7
DIGITAL
J4
COMMUNICATION
J8
PWM
J7
J6
ICSP
J5
PWOER
J1
ANALOG
J2
DC PWOER
U2
U1
SW2
RESET
SW1
RobotDyn®
www.robotdyn.com
Mega WiFi R3
ATmega2560+ESP8266